NiceRF 思为无线 深圳市思为无线科技有限公司
NiceRF Wireless Technology Co., Ltd.

Product Datasheet V1.0

4W UHF Band
High Power Long Range All-in-one
Walkie Talkie Module

SA858

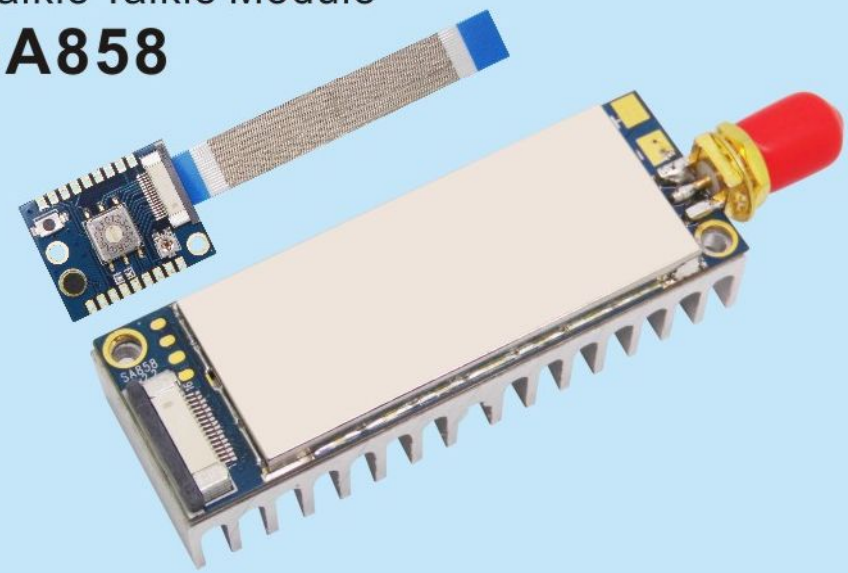

Tel: 86-755-23080616 Fax: 86-755-27838582
Email: sales@nicerf.com Web: www.nicerf.com
Address: 4th floor of DuoTai Bldg, Anle Industrial Zone,
Area 43, Baoan Dist, Shenzhen, China

Catalog

1. Overview....3
2. Features....3
3. Application....3
4. Block Diagram....3
5. Electrical Characteristics....4
6. Application circuit....5
7. Parameter setting....6
8. Communication protocol....7
9. Accessories....9
1) Antenna....9
2) Accessory board....10
3) Heat sink....10
10. Pin definition....11
11. Mechanical dimension....12
12. Order information....12
13. FAQ....12
Appendix 1：Display and Sending Table of CTCSS....13
Appendix 2：SMD reflow chart....16

Note: Revision History

Vevision	Date	Comment
V1.0	2015-5-20	First release

1. Overview

SA858 is a professional 4W / UHF band walkie talkie module. Strong RF circuit, DSP, digital interface, and audio amplifier is built in. Besides Uart command, user can use our provided PC software to configure all the parameters. The parameters includes: Tx frequency, Rx-frequency, Tx CTCSS /CDCSS, Rx CTCSS/CDCSS , digital volume and SQ. To avoid the heating for this high power walkie talkie, we have done special handling on the software with a strong radiator added, which makes it has no problem for long time continuous working.

When SA858 is connected with SA858-PJ, it is easy to organize a professional all in one walkie talkie system, the system include 16 predefined frequency channels, adjustable volume, configurable CTCSS/CDCSS. User need only to connect with power supply and speaker.

Simplified interface and ultra small size make SA858 widely used in various applications and conveniently embedded into various handheld devices.

2. Features

- Full band 400~480 MHZ
- Tx and Rx frequency can be set alone
- Band width 12.5/25KHz
- Output power up to 4W
- Distance up to 7 to 10 km in Open area
- 8 adjustable digital volume
- Analog volume adjustable limitless
- High / low output power selection（1W-4W）
- High sensitivity：-124dBm
- High integrated and small size
- 38 CTCSS
- 166 CDCSS
  (can be set by PC software and serial port)
- Wide range of working voltage 3.3-9V
- Embedded EEPROM, data saved even power off
- 1ppm TCXO, stable performance

3. Application

- Small professional walkie talkie
- Invisible intercom system
- Building community security system
- Sport products
- Handheld / Pocketable device
- Audio surveillance system

4. Block Diagram

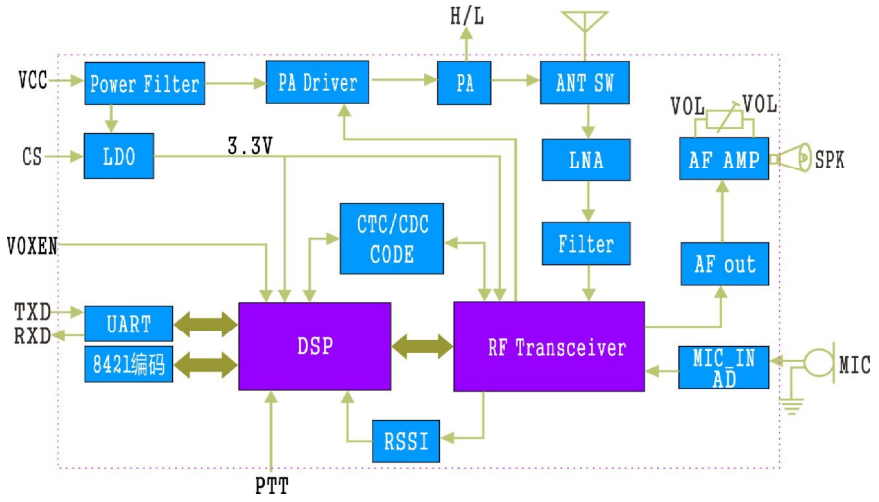

5. Electrical Characteristics

★ Note：In high level, the pins are in 3.3V.

Parameter	Test condition	Min.	Typ	Max.	Unit
Operating voltage range	--	3.3	8	9	V
Operating temperature range	--	-30	20	70	℃
Power consumption					
Sleeping Current	--	--	≤3		uA
RX current	--	--	60		mA
TX current (high output power)	@8v, 424.75MHz	1400	1500		mA
TX current (low output power)		850	900		mA
TX current (high output power)	@4V, 424.75MHz	1100	1150		mA
TX current (low output power)		650	700		mA
TX frequency parameter					
Operating frequency range		400	450	480	MHz
TX current (high output power)	@VCC=4.0V	30	31	32	dBm
TX current (low output power)		26	27	28	dBm
TX current (high output power)	@VCC=8.0V	35	36	36.5	dBm
TX current (low output power)		30.5	31.5	32	dBm
Modulation frequency	@1.5Khz/2.5KHZ frequency deviation		10		mV
Audio modulation distortion	@1.5Khz/2.5KHZ Frequency deviation	--	2	5	%
Signal to Noise Ratio	@1.5Khz/2.5KHZ frequency deviation	38	40	45	dBm
Adjacent Channel Ratio	@12.5K offset	--	-60dBc		dBm
CTCSS Modulation frequency		0.35	0.5	0.75	KHz
RX frequency parameter					
RX sensitivity	13dB output audio SNR	--	-124	--	dBm
RX SNR	@1.5 KHZ Frequency deviation	45	50	--	dB
Audio output power	--	--	2	--	W
Audio output impedance	--	--	8	--	OHm

6. Application circuit

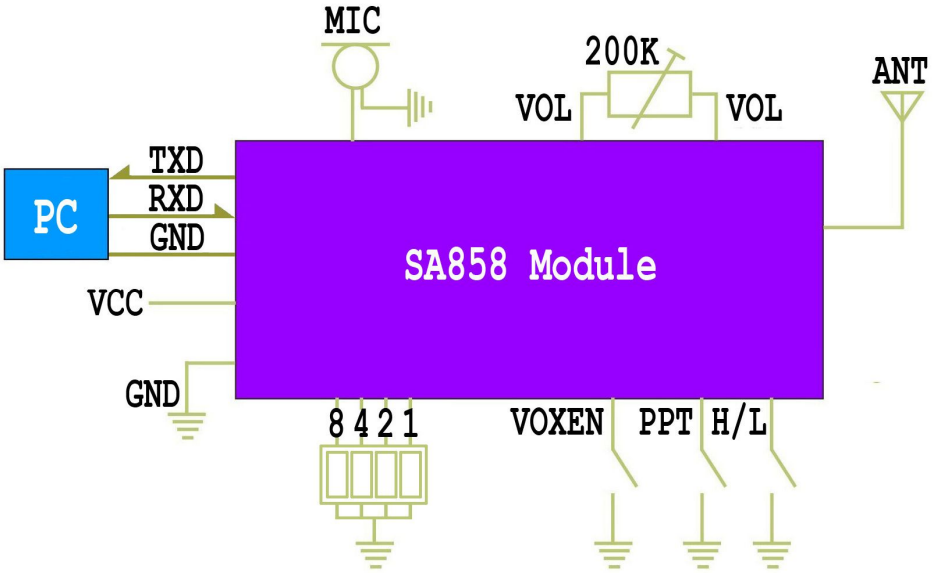

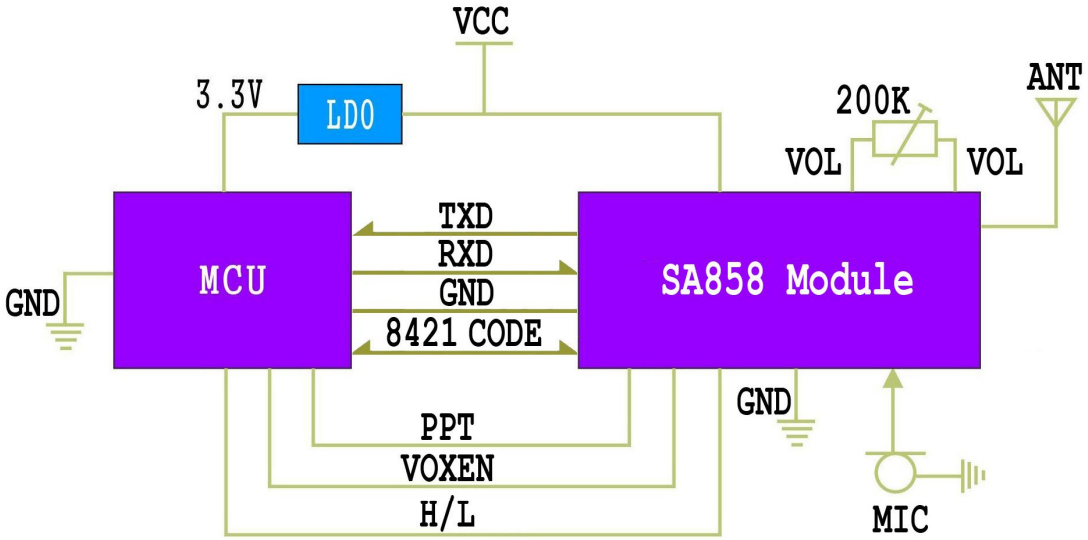

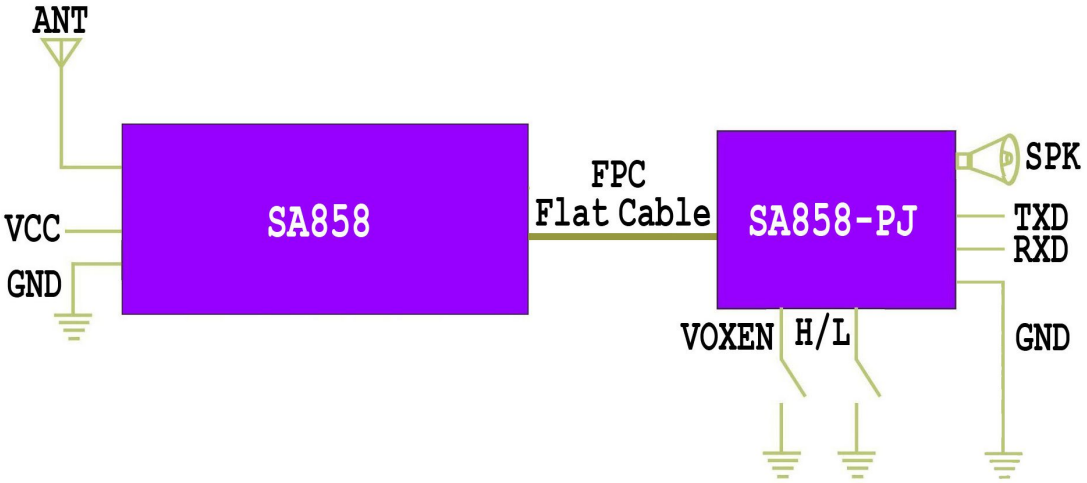

7. Parameter setting

SA858 module provides a standard UART interface for users to configure and read the parameters. Module has integrated memory unit, all setting parameters can be saved when power off. Through USB bridge board, users can connect module with PC device, and we will provide with PC software free for users to configure the inner frequency. It is very easy to use. Wire connecting method is as below:

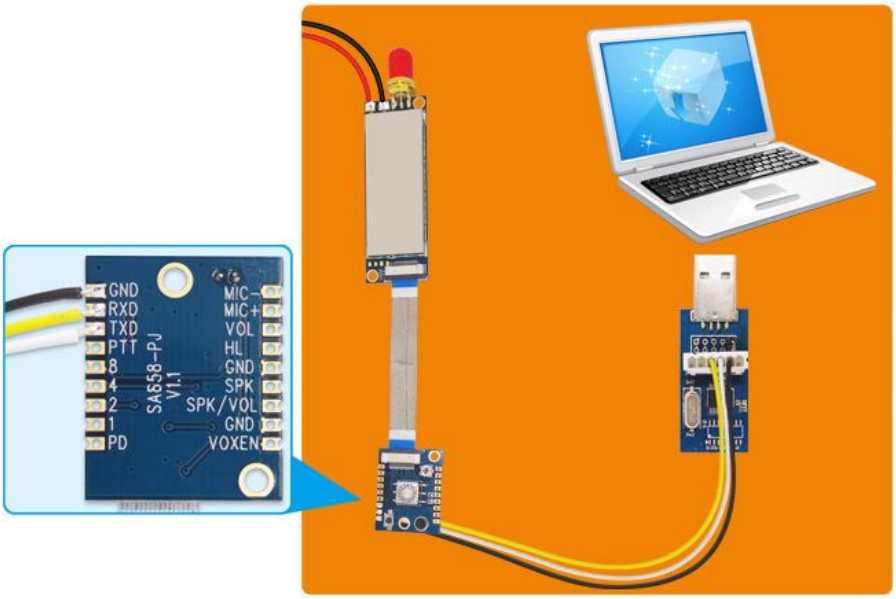

Walkie Talkie Module TTL Interface Diagram

a) Install the USB Driver and PC software in computer.

b) Connect Module with the related interface on USB Bridge Board through 6 pins terminal wire. Also,connect module with DC power.

c) Connect module with computer (PC software) through USB bridge Board.

d) Module has been into setting mode at this time, show as above.

After connected successfully, PC device can read the current parameters, show as below:

- TX channel：TX frequency，16 group，default factory set is as above interface.
- RX channel：RX frequency，16 group，default factory set is as above interface.。
- TX CTCS：TX imitation silent letter，38 level to choose，default set is 0.
- TX CDCS：TX digital silent letter，166 level to choose，default set is none.
- RX CTCS：RX imitation silent letter，38 level to choose，default set is 0.
- RX CDCS：digital silent letter，166 level to choose，default set is none.
- SQ：RX Squelch Level，8 level to choose，default is 1。

★ Note：Users can only choose one of CTCS or CDCS.

8. Communication protocol

Commands Format:

After module is working, the UART parameters to send the command are fixed to:

Baud Rate：9600 bps　Date Bit：8　Stop：1　Parity: None

Commands return format:

Return succeeded：OK\r\n，failed：ERROR\r\n

Frame format definition:

All commands in communication protocol are sending by ASCII code.

★ Note：Specific CTCSS correspond value view on Appendix 1.

➢ Read Module Name and Version Number

Format：AA FA　A

Return Value：SAxxx_VERx.x\r\n

Example：AA FA　A （Hex：0x41 0x41 0x46 0x41 0x41）

Return：SA858_VER1.0\r\n

（Hex：0x53 0x41 0x36 0x31 0x30 0x5f 0x56 0x45 0x52 0x31 0x2E 0x30 0x0D 0x0A）

➢ Read parameter

Format：AA FA　1

Return：AA FA　TFV1，RFV2，.....，TFV16，RFV16，TX_SUBAUDIO，RX_SUBAUDIO，SQ

Parameters instruction is in setting group commands.

Example：AA FA　1 （Hex: 0x41 0x41 0x46 0x41 0x31 ）

Return：AA

450.1250,450.1250,451.1250,451.1250,452.1250,452.1250,453.1250,453.1250,454.1250,454.1250,455.1

250,455.1250,456.1250,456.1250,457.1250,457.1250,458.1250,458.1250,459.1250,459.1250,455.0250,455.0250,455.1250,455.1250,455.2250,455.2250,455.3250,455.3250,455.4250,455.4250,455.5250,455.5250,011,125,8

（Hex: 41 41 34 35 30 2e 31 32 35 30 2c 34 35 30 2e 31 32 35 30 2c 34 35 31 2e 31 32 35 30 2c 34 35 31 2e 31 32 35 30 2c 34 35 32 2e 31 32 35 30 2c 34 35 32 2e 31 32 35 30 2c 34 35 33 2e 31 32 35 30 2c 34 35 33 2e 31 32 35 30 2c 34 35 34 2e 31 32 35 30 2c 34 35 34 2e 31 32 35 30 2c 34 35 35 2e 31 32 35 30 2c 34 35 35 2e 31 32 35 30 2c 34 35 36 2e 31 32 35 30 2c 34 35 36 2e 31 32 35 30 2c 34 35 37 2e 31 32 35 30 2c 34 35 37 2e 31 32 35 30 2c 34 35 38 2e 31 32 35 30 2c 34 35 38 2e 31 32 35 30 2c 34 35 39 2e 31 32 35 30 2c 34 35 39 2e 31 32 35 30 2c 34 35 35 2e 30 32 35 30 2c 34 35 35 2e 30 32 35 30 2c 34 35 35 2e 31 32 35 30 2c 34 35 35 2e 31 32 35 30 2c 34 35 35 2e 32 32 35 30 2c 34 35 35 2e 32 32 35 30 2c 34 35 35 2e 33 32 35 30 2c 34 35 35 2e 33 32 35 30 2c 34 35 35 2e 34 32 35 30 2c 34 35 35 2e 34 32 35 30 2c 34 35 35 2e 35 32 35 30 2c 34 35 35 2e 35 32 35 30 2c s30 31 31 2c 31 32 35 2c 38 0d 0a）

Set to default parameter

Format：AA FA　2

Return：“OK\r\n” or "ERROR\r\n"

Example：AA FA　2　（Hex: 41 41 46 41 32 ）

Return：OK\r\n（Hex: 4f 4b 0d 0a）

Setting group commands：

Description：This command is to tell the module working parameter settings information.

Format：AA FA 3 TFV1，RFV2，.....，TFV16，RFV16，TX_SUBAUDIO，RX_SUBAUDIO，SQ

Parameter description：

TX_SUBAUDIO：Send CTCSS value

RX_SUBAUDIO：Receive CTCSS value

SQ：Squelch level(0～8)　（0: monitor mode, can not used in scan mode）

(Note: Transmitter and receiver can use different CTCSS value，000: no code　001—038: CTCSS，039—204: Display and Sending Table of CTCSS, CDCSS view on Appendix 1)

Example：AA FA 3

450.1250,450.1250,451.1250,451.1250,452.1250,452.1250,453.1250,453.1250,454.1250,454.1250,455.1250,455.1250,456.1250,456.1250,457.1250,457.1250,458.1250,458.1250,459.1250,459.1250,455.0250,455.0250,455.1250,455.1250,455.2250,455.2250,455.3250,455.3250,455.4250,455.4250,455.5250,455.52

50,011,125,8

（Hex: 41 41 46 41 33 34 35 30 2e 31 32 35 30 2c 34 35 30 2e 31 32 35 30 2c 34 35 31 2e 31 32 35 30 2c 34 35 31 2e 31 32 35 30 2c 34 35 32 2e 31 32 35 30 2c 34 35 32 2e 31 32 35 30 2c 34 35 33 2e 31 32 35 30 2c 34 35 33 2e 31 32 35 30 2c 34 35 34 2e 31 32 35 30 2c 34 35 34 2e 31 32 35 30 2c 34 35 35 2e 31 32 35 30 2c 34 35 35 2e 31 32 35 30 2c 34 35 36 2e 31 32 35 30 2c 34 35 36 2e 31 32 35 30 2c 34 35 37 2e 31 32 35 30 2c 34 35 37 2e 31 32 35 30 2c 34 35 38 2e 31 32 35 30 2c 34 35 38 2e 31 32 35 30 2c 34 35 39 2e 31 32 35 30 2c 34 35 39 2e 31 32 35 30 2c 34 35 35 2e 30 32 35 30 2c 34 35 35 2e 30 32 35 30 2c 34 35 35 2e 31 32 35 30 2c 34 35 35 2e 31 32 35 30 2c 34 35 35 2e 32 32 35 30 2c 34 35 35 2e 32 32 35 30 2c 34 35 35 2e 33 32 35 30 2c 34 35 35 2e 33 32 35 30 2c 34 35 35 2e 34 32 35 30 2c 34 35 35 2e 34 32 35 30 2c 34 35 35 2e 35 32 35 30 2c 34 35 35 2e 35 32 35 30 2c s30 31 31 2c 31 32 35 2c 38 0d 0a）

Return commands：“OK\r\n” or "ERROR\r\n"

OK\r\n（Hex: 4f 4b 0d 0a）

9. Accessories

1) Antenna

Antenna is an important part in communication system. Its performance will influence the whole communication system. This module requires antennas impedance in 50oHm. Regular used antenna is rubber straight antenna, sucker antenna, telescopic antenna and so on. Users can choose the antenna according to the application environment. To make sure modules in the best working mode, we recommend the antennas from our company.

2) Accessory board

To make it convenient to use, we have an accessory board SA858-PJ which can be used with SA858 walkie talkie module，the small board extend the pins of the module by the special FPC，the board has integrated with microphone, channel knob, volume knob, PTT button and other device, Users only need to add an external speaker so that it can be used as a high power and micro walkie talkie. Accessory board as below：

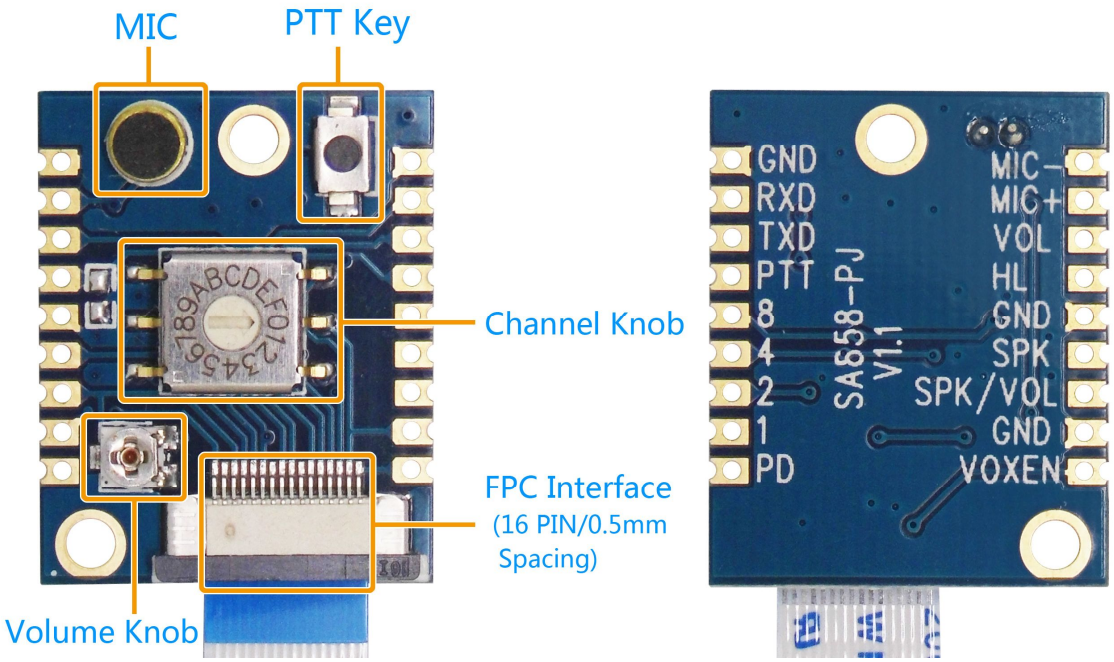

3) Heat sink

This walkie talkie module is a high power wireless device，it will has bigger current during transmitting，so we have equipped module with a specialized heat sink to make sure module can get the best performance when it is generate heat in a long time，show as below：

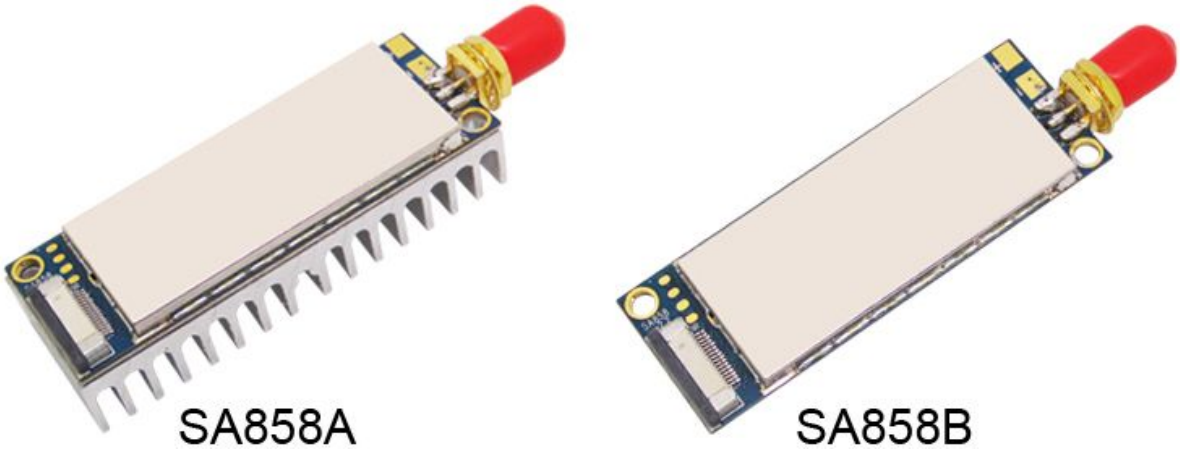

★ Note：If users have their own heat sink device, or our standard heat sink dimension is not suitable for the application, they can also choose bare module without radiator (SA858B)..

10. Pin definition

Pin No.	Pin name	Description
1	MIC+	Connect positive of external microphone
2	GND	Connect negative of external microphone or power ground
3	SPK/VOL	Eternal connect 8 oHm and 2W speaker and volume adjust electronic equipment
4	SPK	Audio output pin, external connect 8oHm and 2W speaker
5	H/L	RF high and lower power pin，connect“0” is lower power，off is high power
6	VOL	Audio volume adjust pin，external connect 200K adjustable electronic equipment
7	GND	External connect negative power
8	RXD	Data receive serial port
9	TXD	Data send serial port
10	VOXEN	Volume enable pin，“0” is open volume control function，“1”is close，default is“1”
11	PTT	Send/receive control pin，“0”is send；“1” is receive，default is receive
12	8	Frequency 16 channels, 8421code，No.8 bits，default is“1”output
13	4	Frequency 16 channels, 8421code，No.4 bits，default is“1”output
14	2	Frequency 16 channels, 8421code，No.2 bits，default is“1”output
15	1	Frequency 16 channels, 8421code，No.1 bit，default is“1”output
16	PD	Module sleep enable，“0” is sleep mode；“1”normal working，default is normal working mode
17	VCC	Connect positive power
18	GND	Connect negative power
19, 21	GND	Connect antenna ground
20	ANT	RF signal output，external connect 50oHm antenna

11. Mechanical dimension

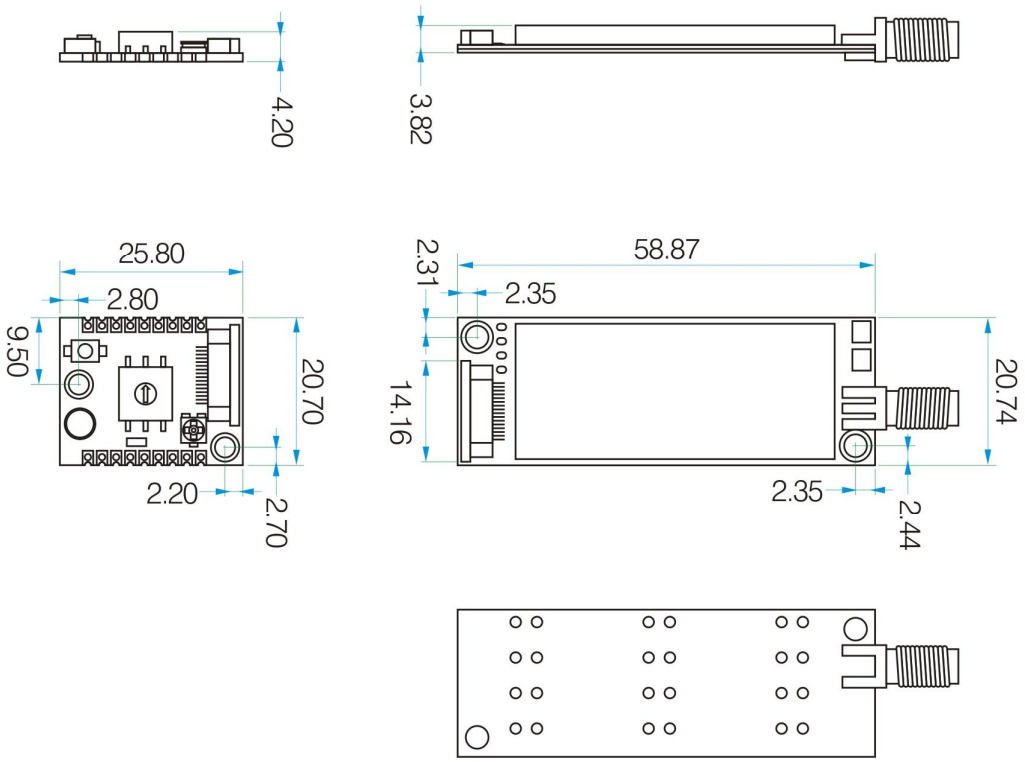

12. Order information

Out factory item	Description
SA858A	High power walkie talkie module with heat sink
SA858B	High power walkie talkie bare module board without heat sink
SA858-PJ	Module accessory, integrated channel knob, volume knob, microphone and PTT button

13. FAQ

a) Why modules cannot communicate properly?

1) Check if there is a power connect error;
2) Check if modules are in normal communication mode;
3) Check if all module are setting in the same frequency, channel and CTCSS;
4) Check if modules are broken.

b) Why the transceiver distance is not as far as it supposed?

1) Check if the power ripple is too high;
2) Check if the antenna is not match or installed incorrectly;
3) Check if there is same frequency interference surround, or there is a bad environment, or strong interference source.

Appendix 1：Display and Sending Table of CTCSS

Send	Display		Send	Display		Send	Display
000	**0**		039	**023I**		122	**023N**
001	**1**		040	**025I**		123	**025N**
002	**2**		041	**026I**		124	**026N**
003	**3**		042	**031I**		125	**031N**
004	**4**		043	**032I**		126	**032N**
005	**5**		044	**043I**		127	**043N**
006	**6**		045	**047I**		128	**047N**
007	**7**		046	**051I**		129	**051N**
008	**8**		047	**054I**		130	**054N**
009	**9**		048	**065I**		131	**065N**
010	**10**		049	**071I**		132	**071N**
011	**11**		050	**072I**		133	**072N**
012	**12**		051	**073I**		134	**073N**
013	**13**		052	**074I**		135	**074N**
014	**14**		053	**114I**		136	**114N**
015	**15**		054	**115I**		137	**115N**
016	**16**		055	**116I**		138	**116N**
017	**17**		056	**125I**		139	**125N**
018	**18**		057	**131I**		140	**131N**
019	**19**		058	**132I**		141	**132N**
020	**20**		059	**134I**		142	**134N**
021	**21**		060	**143I**		143	**143N**
022	**22**		061	**152I**		144	**152N**
023	**23**		062	**155I**		145	**155N**
024	**24**		063	**156I**		146	**156N**
025	**25**		064	**162I**		147	**162N**
026	**26**		065	**165I**		148	**165N**
027	**27**		066	**172I**		149	**172N**

028	**28**		067	**174I**		150	**174N**
029	**29**		068	**205I**		151	**205N**
030	**30**		069	**223I**		152	**223N**
031	**31**		070	**226I**		153	**226N**
032	**32**		071	**243I**		154	**243N**
033	**33**		072	**244I**		155	**244N**
034	**34**		073	**245I**		156	**245N**
035	**35**		074	**251I**		157	**251N**
036	**36**		075	**261I**		158	**261N**
037	**37**		076	**263I**		159	**263N**
038	**38**		077	**265I**		160	**265N**
			078	**271I**		161	**271N**
			079	**306I**		162	**306N**
			080	**311I**		163	**311N**
			081	**315I**		164	**315N**
			082	**331I**		165	**331N**
			083	**343I**		166	**343N**
			084	**346I**		167	**346N**
			085	**351I**		168	**351N**
			086	**364I**		169	**364N**
			087	**365I**		170	**365N**
			088	**371I**		171	**371N**
			089	**411I**		172	**411N**
			090	**412I**		173	**412N**
			091	**413I**		174	**413N**
			092	**423I**		175	**423N**
			093	**431I**		176	**431N**
			094	**432I**		177	**432N**
			095	**445I**		178	**445N**
			096	**464I**		179	**464N**
			097	**465I**		180	**465N**

			098	**466I**		181	**466N**
			099	**503I**		182	**503N**
			100	**506I**		183	**506N**
			101	**516I**		184	**516N**
			102	**532I**		185	**532N**
			103	**546I**		186	**546N**
			104	**565I**		187	**565N**
			105	**606I**		188	**606N**
			106	**612I**		189	**612N**
			107	**624I**		190	**624N**
			108	**627I**		191	**627N**
			109	**631I**		192	**631N**
			110	**632I**		193	**632N**
			111	**654I**		194	**654N**
			112	**662I**		195	**662N**
			113	**664I**		196	**664N**
			114	**703I**		197	**703N**
			115	**712I**		198	**712N**
			116	**723I**		199	**723N**
			117	**731I**		200	**731N**
			118	**732I**		201	**732N**
			119	**734I**		202	**734N**
			120	**743I**		203	**743N**
			121	**754I**		204	**754N**

Appendix 2：SMD reflow chart

We recommend you should obey the IPC related standards in setting the reflow profile:

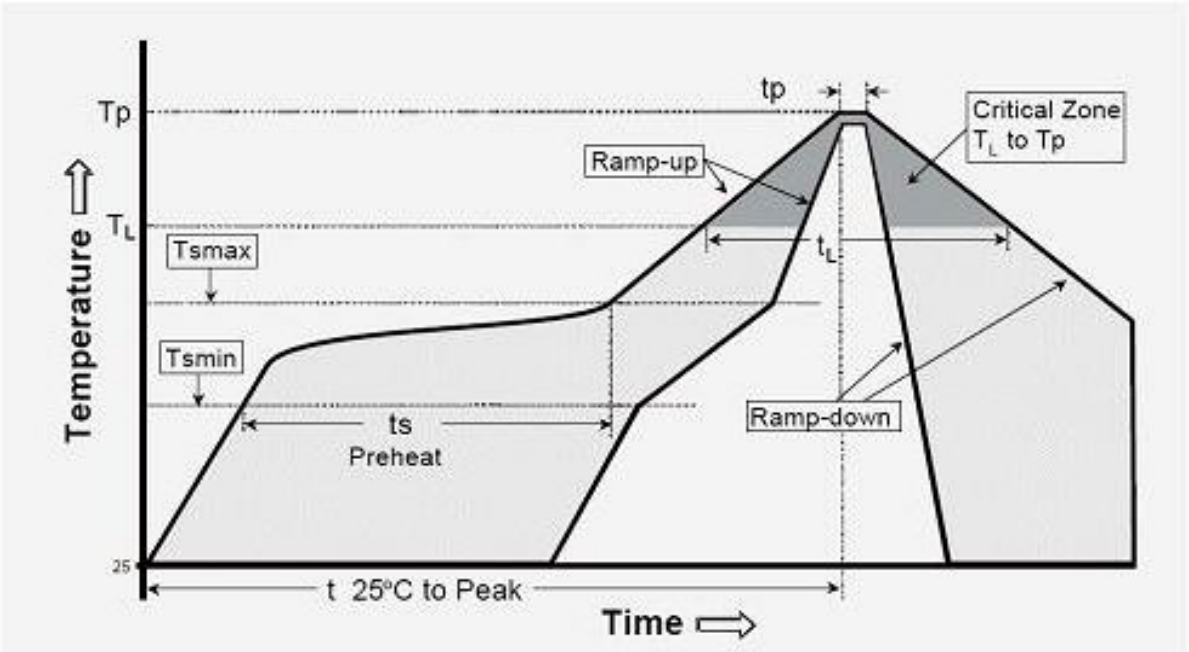

IPC/JEDEC J-STD-020B the condition for lead-free reflow soldering	big size components (thickness >=2.5mm)
The ramp-up rate (Tl to Tp)	3℃/s (max.)
preheat temperature - Temperature minimum (Tsmin) - Temperature maximum (Tsmax) - preheat time (ts)	 150℃ 200℃ 60~180s
Average ramp-up rate(Tsmax to Tp)	3℃/s (Max.)
- Liquidous temperature(TL)	217℃
- Time at liquidous(tL)	60~150 second
peak temperature(Tp)	245+/-5℃